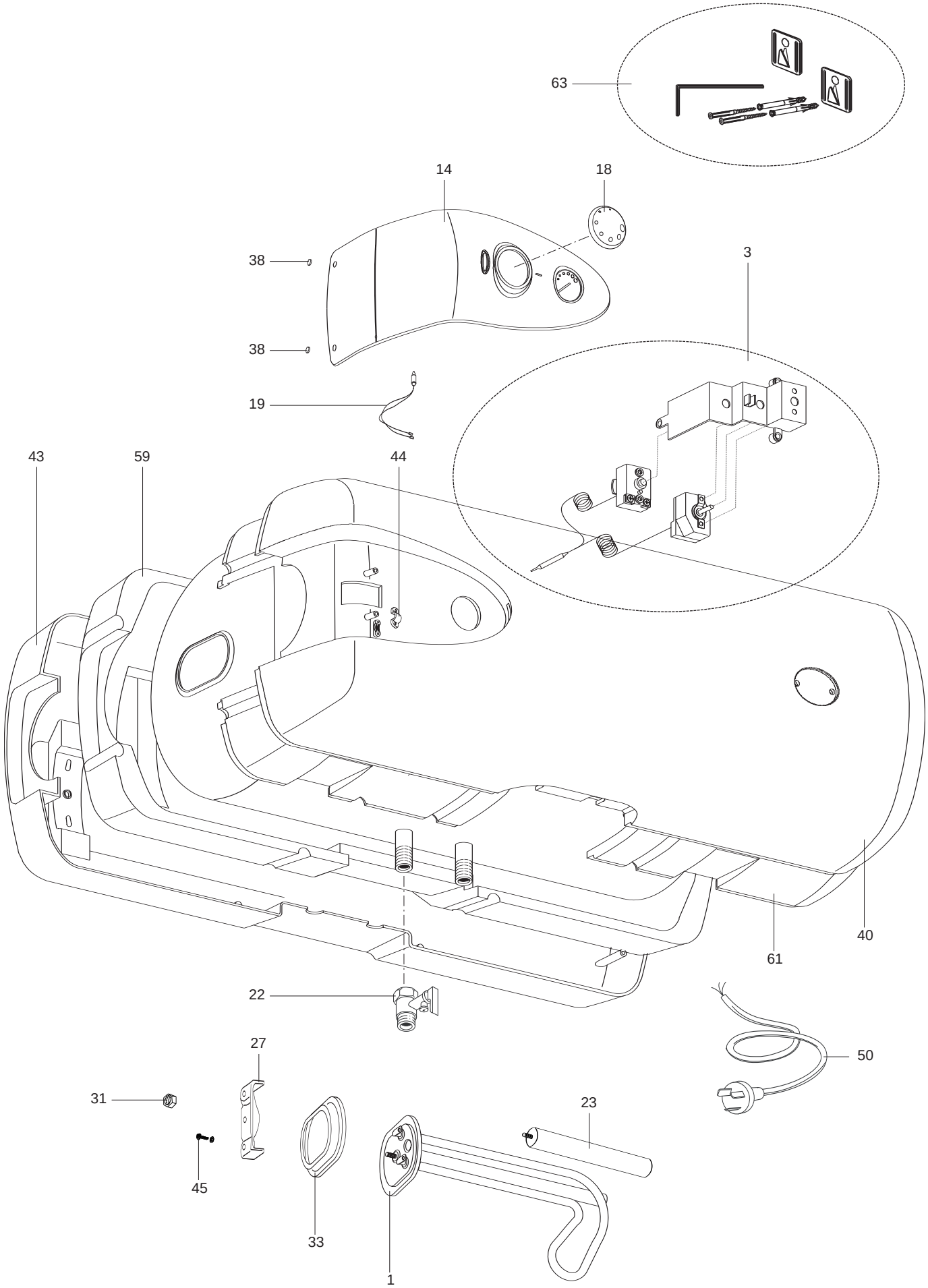

R8220790

Key N	Description	Manf. Pt. N	Other	Type	40	50		Manf. date from	Manf. date to
0001	ELEMENT HE TI-SHAPE	65150049			■	■			
0003	THERMOSTAT TI-SHAPE	65150051			■	■			
0014	ASSEMBLED PLASTIC COVER	977337			■	■			
0018	CONTROL KNOB	976163			■	■			
0019	SIGNAL LAMP	65150050			■	■			
0022	SAFETY VALVE	571730			■	■			
0023	MAGNESIUM ANODE D:25.5 L:180	977127			■	■			
0027	FLANGE BRACKET	976173			■	■			
0031	NUT M6	570069			■	■			
0033	FLANGE GASKET	570340			■	■			
0038	HOLE COVER	977336			■	■			
0040	FRONTBODENBLECH	976778			■	■			
0043	BACK COVER	976777			■	■			
0044	CABLE CLAMP	573266			■	■			
0045	SCREW + SCHEIBE	976492			■	■			
0050	CABLE (POWER SUPPLY)	977399			■	■			
0059	INSULATION BACK COVER	976775			■	■			
0061	INSULATION FRONT COVER	976776			■	■			
0063	INSTALLATION ACCESSORY WITH L	976785			■	■			